Date: Tuesday, 6/19/2007 2:03:28 PM
User: Kim Johnston

26

Process Sheet

Customer	: CU-DAR001 Dart Helicopters Services	Drawing Name	: FWD X-TUBE EXTENDED HEIGHT GEAR (-011)
Job Number	: 32939		
Estimate Number	: 10007		
P.O. Number	: N/A	Part Number	: D205596101
This Issue	: 6/19/2007 S.O. No. : N/A	Drawing Number	: D205-596-101 REV A
Prsht Rev.	: NC	Project Number	: N/A
First Issue	: N/A Type : LANDING GEAR	Drawing Revision	: A
Previous Run	: 32765	Material	: N/A
Written By	:	Due Date	: 6/29/2007 Qty: 1 Um: Each
Checked & Approved By	: KJ 07.06.20		
Comment	: Est Rev G Removed Bending 05-10-25 JLM		

Additional Product

Job Number:

Seq. #:	Machine Or Operation:	Description :
1.0	DC	DOCUMENT CONTROL

Comment: DOCUMENT CONTROL
Photocopy D205-594 bluefile & type labels per PPP D205-596-101 CHG001 KS 07.06.20 (1)

2.0	D2889	FWD Crosstube

Comment: Qty.: 1.0000 Each(s)/Unit Total : 1.0000 Each(s)
FWD Crosstube
Pick:

Qty	Part number	Description	Batch
1	D2889	Fwd Crosstube	33025

3.0	BENDING	BENDING MACHINE

Comment: BENDING MACHINE
Bend as per Dwg D2889 EL 7-7-4

4.0	LANDING GEAR 1	LANDING GEAR RESOURCE 1

Comment: LANDING GEAR RESOURCE 1
Mark 31.53" for cutting from tangential line in the straight section from D2889 as per Dwg wall template.
Identify off-cuts with batch number & part number and bring them to cnc lathe EL 7-7-4

5.0	QC15	DIMENSIONAL CHECK OF X-TUBES

Comment: DIMENSIONAL CHECK OF X-TUBES

Form: rprocess

Dart Aerospace Ltd

W/O:		WORK ORDER CHANGES					
DATE	STEP	PROCEDURE CHANGE	By	Date	Qty	Approval Chief Eng / Prod Mgr	Approval QC Inspector

Part No: _____ **PAR #:** _____ **Fault Category:** _____ **NCR:** Yes No **DQA:** _____ **Date:** _____

QA: N/C Closed: _____ **Date:** _____

NCR:		WORK ORDER NON-CONFORMANCE (NCR)						
DATE	STEP	Description of NC Section A	Corrective Action Section B			Verification Section C	Approval Chief Eng	Approval QC Inspector
			Initial Chief Eng	Action Description Chief Eng	Sign & Date			

NOTE: Date & initial all entries

Date: Tuesday, 6/19/2007 2:03:28 PM
User: Kim Johnston

Process Sheet

6

Customer: CU-DAR001 Dart Helicopters Services **Drawing Name:** FWD X-TUBE EXTENDED HEIGHT GEAR (-011)

Job Number: 32939 **Part Number:** D205596101

Job Number:

Seq. #:	Machine Or Operation:	Description :
6.0	LANDING GEAR 1	LANDING GEAR RESOURCE 1

Comment: LANDING GEAR RESOURCE 1

1-Cut as per Dwg D205-596-101 EL 7-7-11

2-Deburr & Inspect for surface damage. Polish cut surface.Scribe part # and end of tube. Batch # on one JD 7-7-13

7.0	QC15	DIMENSIONAL CHECK OF X-TUBES

07-07-13

Comment: DIMENSIONAL CHECK OF X-TUBES

8.0	HAND FINISHING1	HAND FINISHING RESOURCE #1

Comment: HAND FINISHING RESOURCE #1
Chemical Conversion Coat per QSI 005 4.1 JD 7-7-13

9.0	SPRAY PAINTING	SPRAY PAINTING

Comment: SPRAY PAINTING
Prime inside and outside with Immron per QSI 005 4.2 ET 07-08-08

10.0	QC14	INSPECT SPRAY PAINT

07 08 09 (1)

Comment: Inspect Spray Paint

11.0	D2856600851	Abrasion Strip

Comment: Qty.: 2.0000 Each(s)/Unit Total : 2.0000 Each(s)
Abrasion Strip
Pick:

Qty	Part number	Description	Batch
2	D2856-600-851	Abrasion Strip	26650

ET 07 08 17

12.0	D28931	Support

Comment: Qty.: 2.0000 Each(s)/Unit Total : 2.0000 Each(s)
Support
Pick:

Qty	Part number	Description	Batch
2	D2893-1	Support	73560

ET 07-08-17

Form: mprocess

Dart Aerospace Ltd

W/O:		WORK ORDER CHANGES					
DATE	STEP	PROCEDURE CHANGE	By	Date	Qty	Approval Chief Eng / Prod Mgr	Approval QC Inspector

Part No: _____ **PAR #:** _____ **Fault Category:** _____ **NCR:** Yes (No) **DQA:** LD **Date:** 07/08/23

QA: N/C Closed: _____ **Date:** _____

NCR:		WORK ORDER NON-CONFORMANCE (NCR)						
DATE	STEP	Description of NC Section A	Corrective Action Section B			Verification Section C	Approval Chief Eng	Approval QC Inspector
			Initial Chief Eng	Action Description Chief Eng	Sign & Date			

NOTE: Date & initial all entries

Date: Tuesday, 6/19/2007 2:03:28 PM
User: Kim Johnston

Process Sheet

Customer: CU-DAR001 Dart Helicopters Services **Drawing Name:** FWD X-TUBE EXTENDED HEIGHT GEAR (-011)

Job Number: 32939 **Part Number:** D205596101

Job Number:

Seq. #:	Machine Or Operation:	Description :
13.0	MS2192024	Clamp(per MIL-DTL-8783C)

Comment: Qty.: 4.0000 Each(s)/Unit Total : 4.0000 Each(s)
Pick:

Qty	Part number	Description	Batch
4	MS21920-24	Clamp	103 945

RT 07-0817

14.0	LANDING GEAR 1	LANDING GEAR RESOURCE 1

Comment: LANDING GEAR RESOURCE 1
1-Install Abrasion strips per QSI 035 position using DT8582: Install supports and clamps per Dwg D205-596-101. Torque clamps to 80-100 in lb. Seal edges of support using Sikaflex RT 07-0817

15.0	QC5	INSPECT WORK TO CURRENT STEP

Comment: INSPECT WORK TO CURRENT STEP 07/08/22 (+1)

16.0	PACKAGING 1	PACKAGING RESOURCE #1

Comment: PACKAGING RESOURCE #1
Identify and pack for shipping as per PPP D205-596-101
Location: REV: E 07/08/22 SP

17.0	QC21	FINAL INSPECTION/W/O RELEASE

Comment: FINAL INSPECTION/W/O RELEASE 07/08/23 (1)

Job Completion

U 07.08.23

B 32939 D205 596 101

Form: rprocess

Dart Aerospace Ltd

W/O:		WORK ORDER CHANGES					
DATE	STEP	PROCEDURE CHANGE	By	Date	Qty	Approval Chief Eng / Prod Mgr	Approval QC Inspector

Part No: _____ **PAR #:** _____ **Fault Category:** _____ **NCR:** Yes No **DQA:** _____ **Date:** _____

QA: N/C Closed: _____ **Date:** _____

NCR:		WORK ORDER NON-CONFORMANCE (NCR)						
DATE	STEP	Description of NC Section A	Corrective Action Section B			Verification Section C	Approval Chief Eng	Approval QC Inspector
			Initial Chief Eng	Action Description Chief Eng	Sign & Date			

NOTE: Date & initial all entries

DART AEROSPACE LTD	Work Order:	32939
Description: Crosstube High-High Fwd	**Part Number:**	**D205-596-101**
Inspection Dwg: D205-596-101 **Rev:** A		**Page 1 of 1**

Required Dimension	Min	Max
Height	38.2	38.4
1/2 Span	59.5	59.7
Angle	49	52
Total Span	119.0	119.4

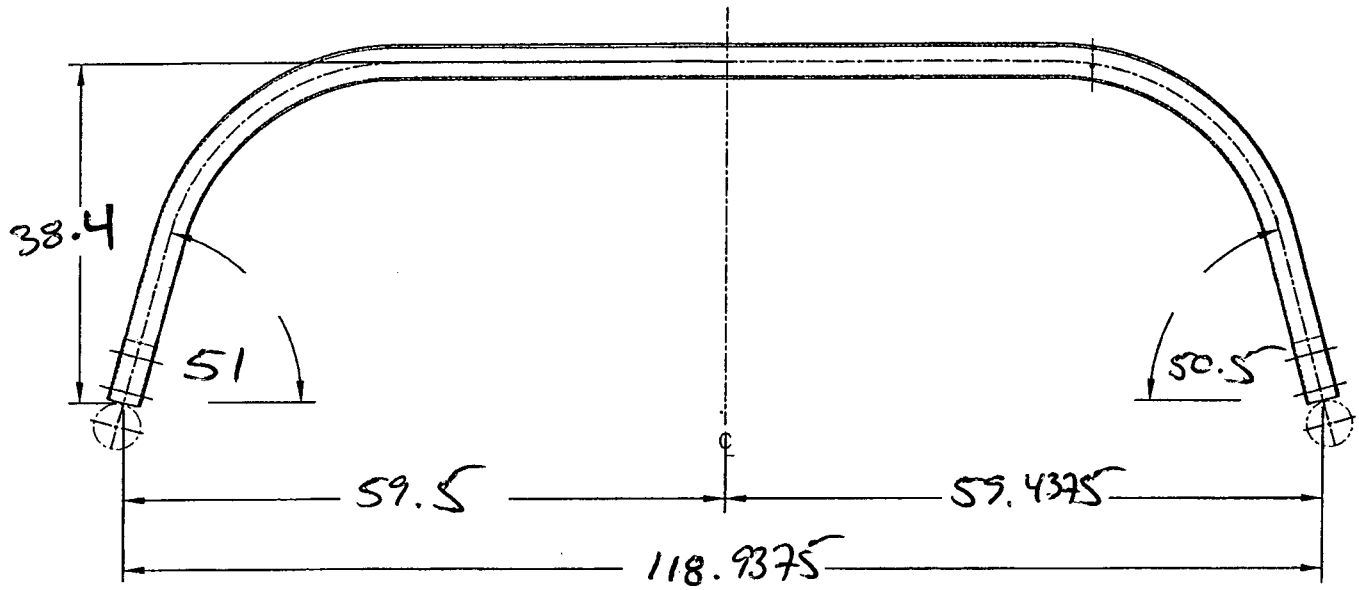

Comments

QC15 Inspection	051042
Date	07.07.04

Rev	Date	Change	Revised by	Approved
A	07.02.06	New Issue	KJ/JM	

RELEASED
02.06.04

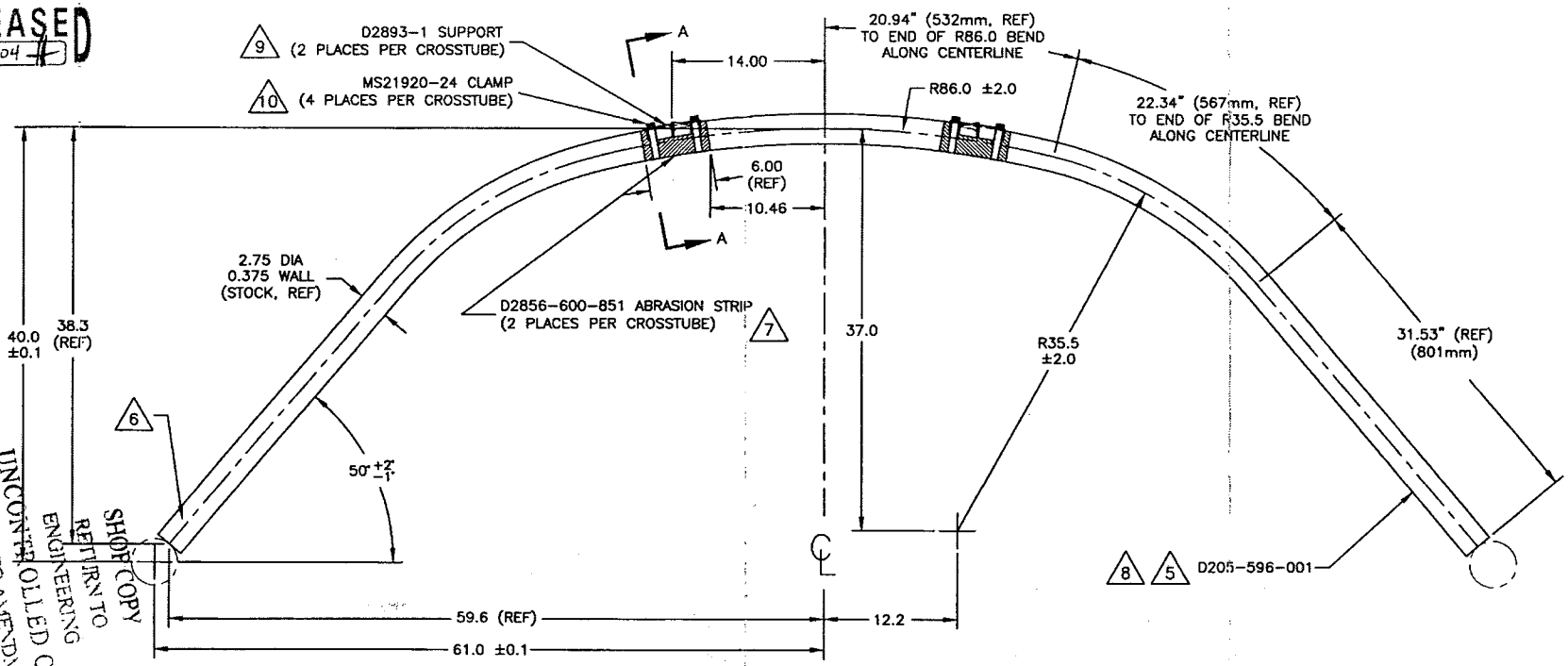

UNCONTROLLED COPY
SUBJECT TO AMENDMENT WITHOUT NOTICE
ENGINEERING
RETURN TO
SHOP COPY
WORK ORDER NO. 32931

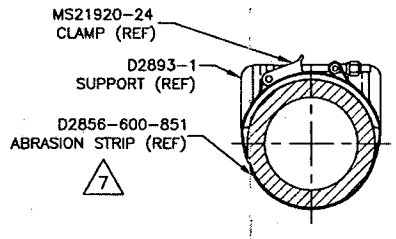

SECTION A-A
SCALE 2:5

GENERAL NOTES:
1) TOLERANCES ARE PER DART QSI 018 UNLESS OTHERWISE NOTED
2) MATERIAL: MANUFACTURE FROM D6005-180
FINISHED LENGTH = 149.60
3) FINISH: CHEMICAL CONVERSION COAT PER DART QSI 005 4.1
PRIME INSIDE AND OUTSIDE PER DART QSI 005 4.2
PAINT OUTSIDE PER DART QSI 005 4.2
4) PART IS SYMMETRIC ABOUT CENTERLINE
5) BEND PROGRESSIVELY WITH A MINIMUM OF 3 PASSES. MAXIMUM TUBE FLATTENING DUE TO BENDING IS 6% BASED ON O.D.
6) SCRIBE DART PART NUMBER AND BATCH NUMBER IN THIS AREA WITH VIBRATING STYLUS
7) INSTALL D2856-600-851 ABRASION STRIP WITH A 0.13 (REF) GAP ON BOTTOM SIDE OF CROSSTUBE, CENTERED OPPOSITE D2893-1 SUPPORT, PER QSI 035
8) EXTREME CARE MUST BE TAKEN TO PROTECT THE OUTSIDE SURFACE OF THE TUBE. THE OUTSIDE SURFACE MUST BE SMOOTH AND FREE FROM SURFACE DEFECTS SUCH AS SCRATCHES, NICKS, OR DENTS. DEFECTS UP TO 0.005" MAY BE BLENDED OUT LONGITUDINALLY. CIRCUMFERENTIAL GRIND MARKS ARE UNACCEPTABLE.
9) SEAL EDGES OF SUPPORTS USING SIKAFLEX-241/-291 SEALANT (OPTIONAL)
10) TORQUE CLAMPS 80 TO 100 IN-LB

COPYRIGHT © 2002 BY DART AEROSPACE LTD.

THIS DOCUMENT IS PRIVATE AND CONFIDENTIAL AND IS SUPPLIED ON THE EXPRESS CONDITION THAT IT IS NOT TO BE USED FOR ANY PURPOSE OR COPIED OR COMMUNICATED TO ANY OTHER PERSON WITHOUT WRITTEN PERMISSION FROM DART AEROSPACE LTD.

A	02.05.27	NEW ISSUE	
DESIGN	DRAWN BY	DART AEROSPACE LTD. HAWKESBURY, ONTARIO, CANADA	
CHECKED	APPROVED	DRAWING NO. D205-596-101	REV. A SHEET 1 OF 1
DATE 02.05.27		TITLE XTUBE ASS'Y (HI-HI FWD)	SCALE 1:10